DULEVO INTERNATIONAL

850

INDUSTRIAL AND CLEANING EQUIPMENT

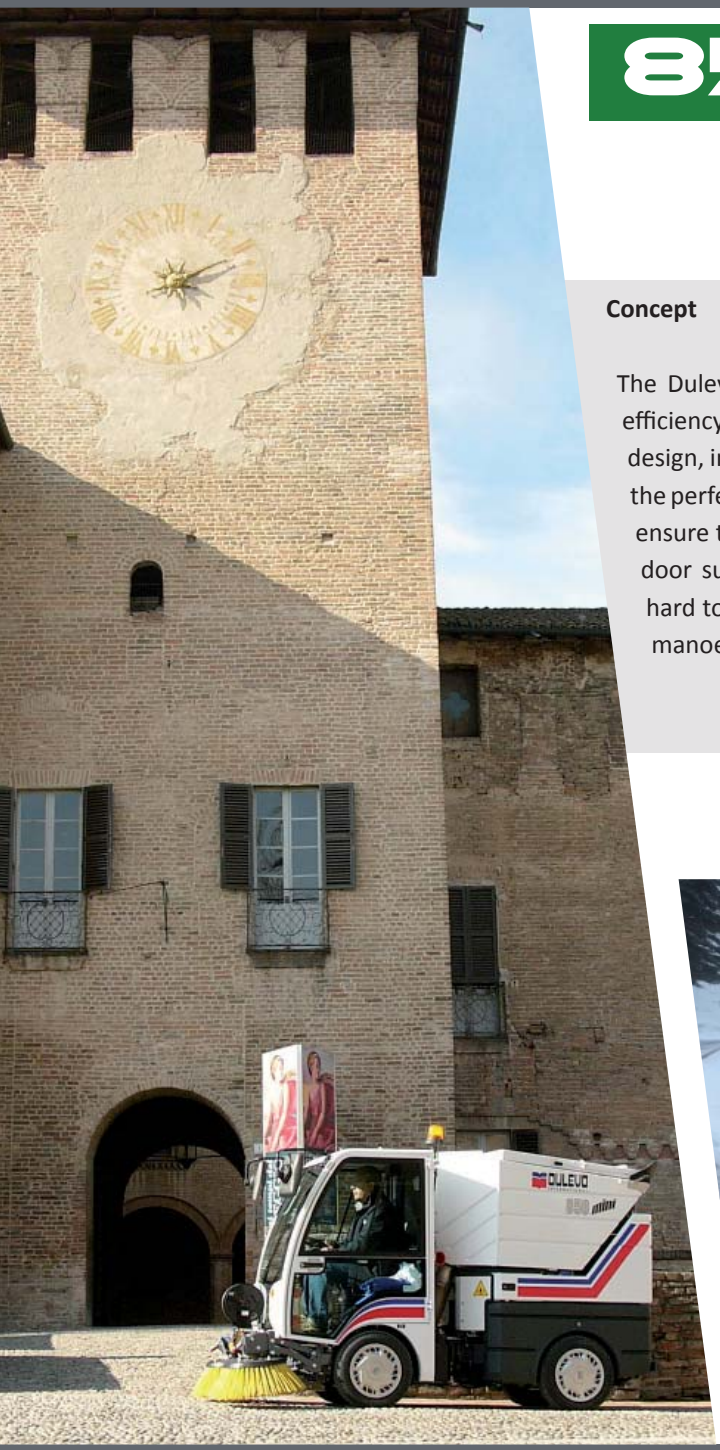

850

Concept

The Dulevo 850 is, thanks to the excellent synergy of compact design, superlative sweeping efficiency and the large waste hopper capacity, the smallest raod sweeper of its class. Modern design, innovative constructions and effective solutions for applications make the Dulevo 850 to the perfect working tool for all seasons. Latest technology and the used high-quality components ensure the high quality demands of the market. Next to the normal operating spectrum of out door surfaces, cycle paths and pedestrian areas, the Dulevo 850 is particularly suitable for hard to reach or low areas as parking lots because of its perfect machine dimensions and the manoeuvrability.

Environment

Environmental awareness and Dulevo belongs together since time immemorial. Low noise and dust emission belongs as well as low water and fuel consumption to the basic concept of the Dulevo 850. The engine respects the latest EU emission regulations.

Comfort

In addition to the application specifications, the ergonomics and operators comfort are a priority. The over-sized standard tires, axles suspension and ideal weight distribution insure a balanced and safe driveability. The powerful drive transmission ensure the use in difficult conditions and on slopes. The hydraulically assisted steering greatly simplify complex manoeuvres.

Working performance

The Dulevo 850 is reaching due to the flexible adjustable working width of the side brushes a maximum of productivity. The unique suction mouth and the powerful suction turbine pick up highly effective material as grit, sand and bulky debris. The large water capacity ensure highest operating autonomy and reduce resetting times. The performance can be increased by the optional and innovative recycling system.

Access & Service

The innovative, modular structure, without the use of electronic and belt driven components and the easily removable side-mounted water tanks, simplify the access to all important components for service and maintenance. An additional maintenance hatch below the drivers seat and the button window support easy daily interventions on the suction mouth and hose.

Cabin

The symmetrically arranged cabin of the Dulevo 850 has been developed for the best operators comfort. An additional insulation, springs and the separation of the cabin from the main sources as engine and turbine, protects the operator from noise emissions and vibrations. The generous interior space of the cabin makes the machine to an extremely comfortable workplace. The large window surfaces of the cab allows the unobstructed all-round view of the working area. The standard equipment include heated mirrors and the air condition .

Operations

The steering column is individually adjustable, the laterally disposed and intuitive control panel is due to self-explanatory function buttons ease to use and avoid operating errors. The side brush units are controlled by a joystick of the ergonomic positioned control unit located at the arm rest.

Application

The full motion side brushes are excellent for sweeping corners, gutters and for increasing the working width. The large button window allows the operator perfect view on the suction mouth. As additional working tools a high pressure unit and a manual suction hose can be fitted optionally to enlarge the working spectrum.

Security

A major concern of Dulevo is always the safety in the working environment of the machine. The Dulevo 850 is standardly equipped with a reverse camera with a color screen in the cabin, next to a accustical warning beeper to ensure a safe reverse driving.

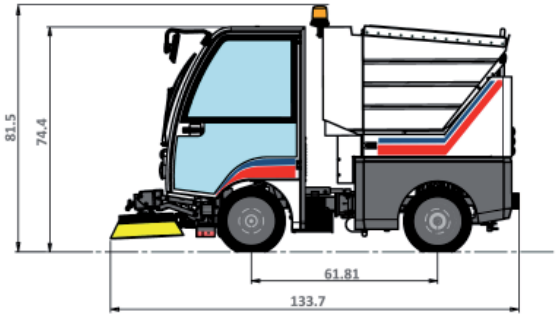

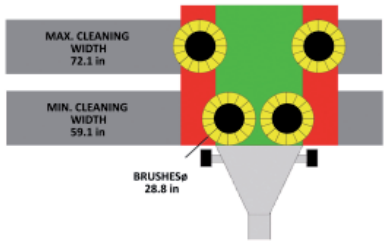

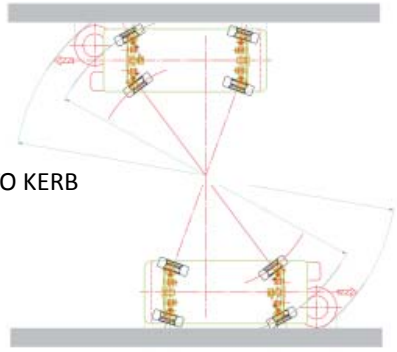

KERB TO KERB
ft 11.2

Technical Data		850
Sweeping width variable	in	59.1 - 72.1
Waste container capacity	yd^3	1.1
Dumping Height	in	56.2
Number of seats	n°	1
Cleaning performance	ft^2/h	236,720
Maximum speed	mph	18.7
PM10 Filtration	%	99
Engine Brand		KUBOTA
Fuel		Diesel
Length	in	133.7
Width	in	42.6
Height	in	81.5

DULEVO INTERNATIONAL S.P.A.
Via G.Guareschi,1 - 43012 - Fontanellato (Parma) Italia
ph: +39 0521 827711 - Fax: +39 0521 827795
info@dulevo.com - www.dulevo.com

Ed. 00-2016 - C (copyright) 2014 Dulevo International S.p.a.

Specifications are not binding for our company and subject to change at any time without notice